1:25,000,000 SHADED RELIEF AND TOPOGRAPHIC MAPS

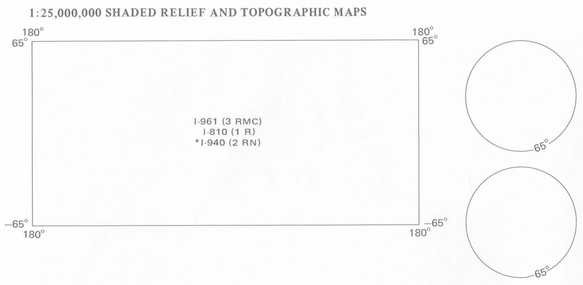

1:15,000,000 SHADED RELIEF AND TOPOGRAPHIC MAPS

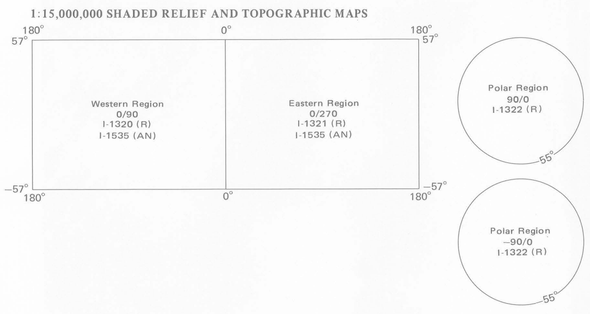

1:5,000,000 SHADED RELIEF AND TOPOGRAPHIC MAPS

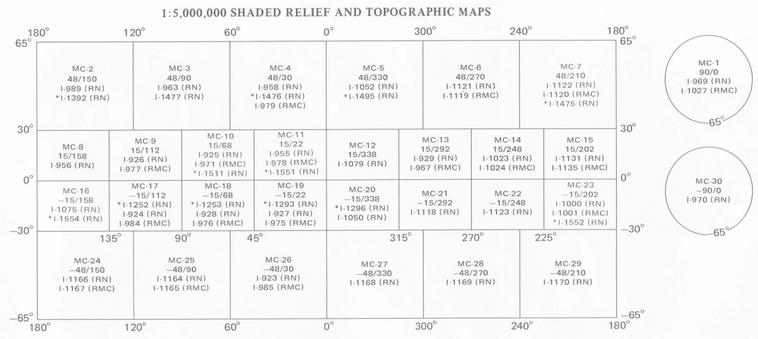

SPECIAL AREA MAPS — VARIABLE SCALES

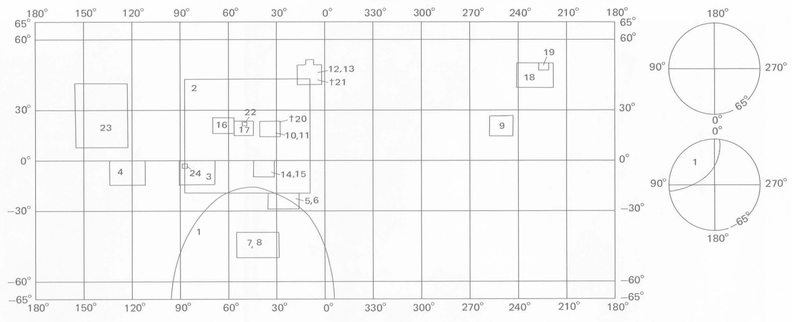

1.	Argyre Planitia	I-1264	–50/44	RN	1:5M
2.	Chryse Planitia	I-1448	12/47	RN	1:5M
3.	Coprates NW (MC-18 NW)	I-1295	–7/79	R	1:2M
4.	Phoenicis Lacus (MC-17 NW)	I-1478	–7/124	R	1:2M
5.	Mare Erythraeum	I-986	–24/26	RMC	1:1M
6.	Mare Erythraeum	I-947	–24/26	RN	1:1M
7.	Nereidum Montes	I-957	–45/42	RN	1:1M
8.	Nereidum Montes	I-1002	–45/42	RMC	1:1M
9.	Tritonis Lacus	I-1055	20/252	RN	1:1M
10.	Chryse	I-939	20/34	RN	1:1M
11.	Chryse	I-983	20/34	RMC	1:1M
12.	Cydonia	I-946	44/10	RN	1:1M
13.	Cydonia	I-988	44/10	RMC	1:1M
14.	Capri	I-1026	–4/39	RN	1:1M
15.	Capri	I-1046	–4/39	RMC	1:1M
16.	Chryse East	I-1069	22/35	CMC	1:1M
17.	Chryse West	I-1068	23/50	CMC	1:1M
18.	Utopia	I-1061	46/230	CM	1:1M
19.	Canberra	I-1060	48/226	CM	1:250K
20.	Chryse High Res.	I-991	20/34	CM	1:250K
21.	Cydonia High Res.	I-990	44/10	CM	1:250K
22.	Yorktown	I-1059	22/48	CMC	1:250K
23.	Olympus Mons	I-1379	22/138	CM	1:2M
24.	Tithonium Chasma	I-1294	–06/85.5	OMT	1:500K

† Sheet contains noncontiguous, high-resolution pictures that are identified by latitude and longitude

1:2,000,000 CONTROLLED PHOTOMOSAICS

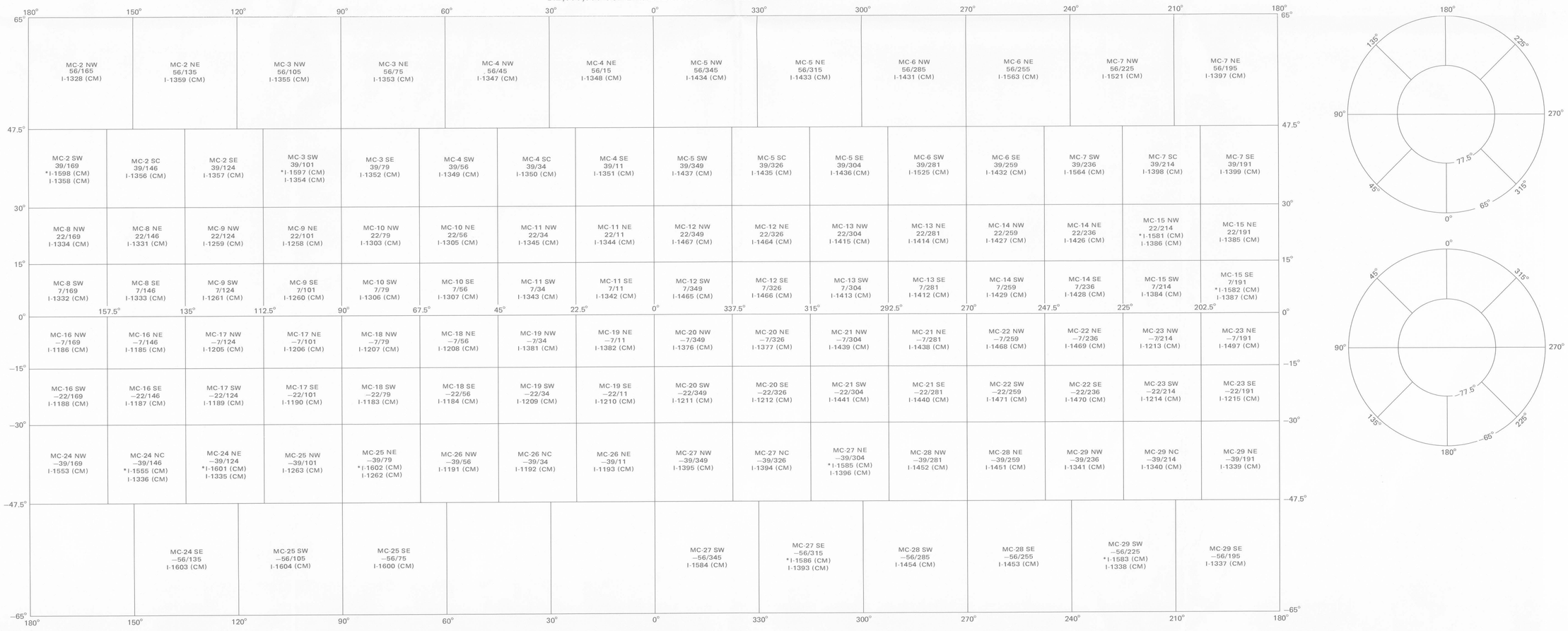

INDEXES OF PUBLISHED MAPS OF MARS

The scale and type of a specific map series are shown near each index. Within each index, published quadrangles are outlined and indicated by an appropriate designator and "I" series number. An "I" series number preceded by an asterisk (*) indicates the latest edition of a map that has been revised. Information is current as of the date of publication of this sheet. Maps are for sale by the Branch of Distribution, U.S. Geological Survey, 1200 South Eads Street, Arlington, VA 22202, and the Branch of Distribution, U.S. Geological Survey, Box 25286, Federal Center, Denver, CO 80225.

MAP DESIGNATORS	DEFINITION
R	Shaded relief
M (old)	Albedo markings
RN	Shaded relief with nomenclature
RMC (old)	Shaded relief with albedo markings and contour lines
CM	Controlled photomosaic
CMC (old)	Controlled photomosaic with albedo marking and contour lines
OMT	Orthophoto mosaic with nomenclature and contour lines
AN	Airbrush rendition with nomenclature

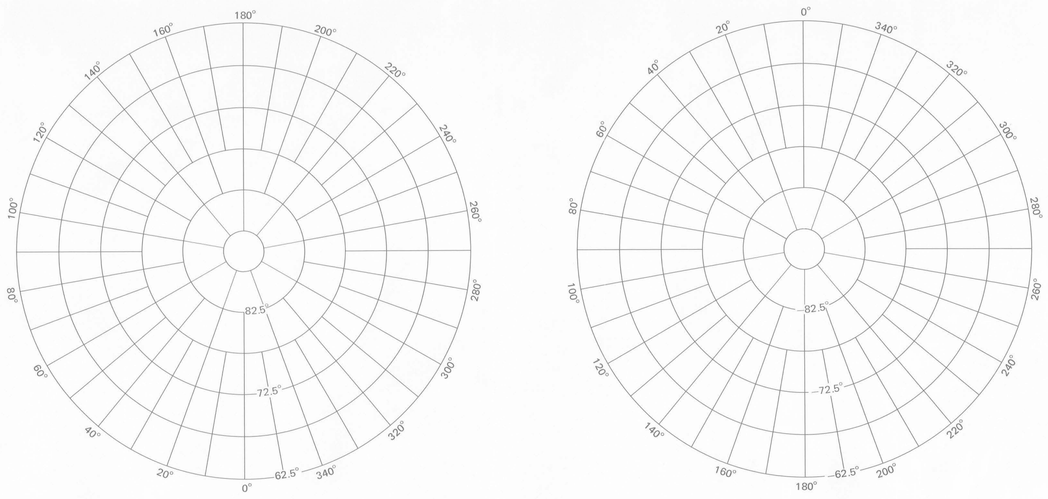
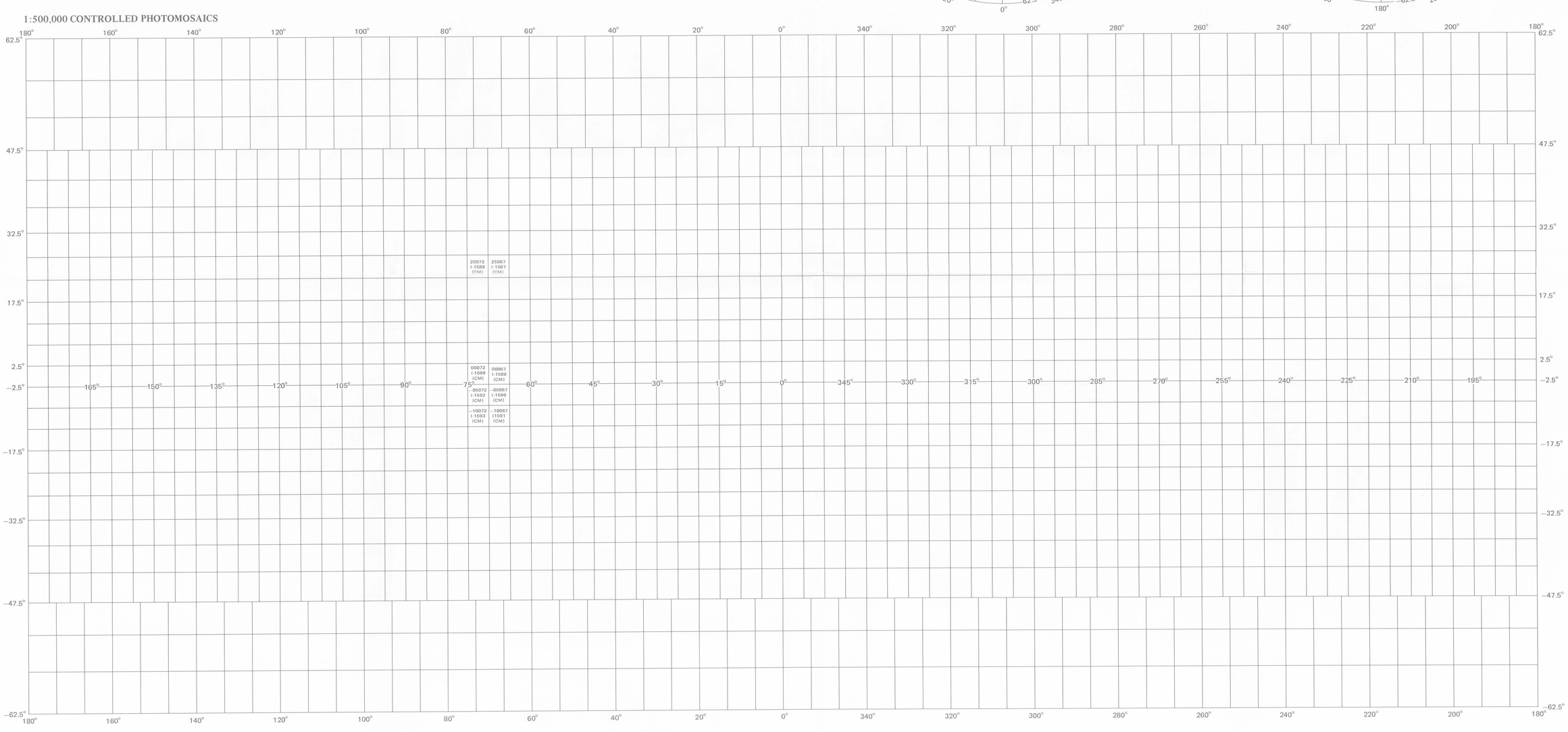
1:500,000 CONTROLLED PHOTOMOSAICS